Aerospace Systems (2025) 8:701–716
https://doi.org/10.1007/s42401-025-00343-3

ORIGINAL PAPER

An intelligent energy management system for enhanced performance in electric UAVs

Mohamed S. Elkerdany[1] · Ibrahim M. Safwat[1] · Ahmed Medhat M. Youssef[2] · Mohamed M. Elkhatib[3]

Received: 8 October 2024 / Revised: 7 December 2024 / Accepted: 3 January 2025 / Published online: 26 January 2025
© Shanghai Jiao Tong University 2025

Abstract
Unmanned aerial vehicles (UAVs) propelled by electricity have emerged as a prominent concept in aviation due to their eco-friendly and stealth characteristics. To address the limitations of Polymer Membrane Fuel Cell (PMFC), which serve as the primary power source but exhibit sluggish responses to sudden load changes, this research proposes a novel hybrid power system incorporating a Li-Ion battery. This hybrid setup ensures superior dynamic response while maintaining high power-to-weight efficiency. This paper presents an intelligent energy management system (EMS), which effectively regulates power flow between the PMFC and Li-Ion battery through a multi-input multi-output (MIMO) control framework. The uniqueness of this study lies in the comparative evaluation of two advanced EMS control strategies: Fuzzy Logic Control and the Adaptive Neuro-Fuzzy Inference System (ANFIS), under multiple flight modes. By thoroughly analyzing system transients and dynamic behaviors using MATLAB/SIMULINK, this work provides a detailed insight into optimizing UAV power efficiency. Unlike previous studies, this research highlights the distinct advantages and limitations of each control strategy for different flight phases, providing a comprehensive benchmark for future EMS designs in UAV applications.

Keywords Energy management system · Fuzzy logic control · BLDC motors control · Intelligent control · Hybrid power systems · Power electronic converters

1 Introduction

1.1 Technical aspects

Large UAVs typically employ internal combustion engines (ICEs) as their main source of propulsion due to the high energy density of gasoline. However, the range of these UAVs is inherently limited by the quantity of fuel they can carry; increasing the amount of fuel also adds to the overall weight, reducing efficiency and performance [1]. In contrast, electric motors are smaller and lighter, making them a more favorable choice for smaller UAV applications [2]. For UAV propulsion, energy sources must have high power and energy density, in addition to a quick dynamic response. Multiple types of DC electric energy sources have been utilized, with various studies examining their strengths and weaknesses to determine the most effective option [3].

The motivation for this research lies in improving the power supply system for UAVs to boost their capability. Enhancements in this area have notably increased the UAV's endurance, extending flight duration from 1.22 h using only a battery to 3 h when employing a hybrid system of fuel cells and batteries [4]. Solar energy, though considered as a DC energy source, is insufficient for small reconnaissance UAVs because it requires a large wingspan, and its reliance on sunlight limits its operational time to daylight hours only. Super-capacitors offer benefits like a long operational lifespan and minimal maintenance, but their limitations include high weight, large size, low energy density, rapid self-discharge, and high startup costs. Therefore, batteries

✉ Mohamed S. Elkerdany
mohamed_elkerdany@ieee.org; m.sameh93@mtc.edu.eg

Ibrahim M. Safwat
Khalilos81@yahoo.com

Ahmed Medhat M. Youssef
ammyk.khater@yahoo.com

Mohamed M. Elkhatib
mohamed.m.elkhatib@ieee.org;
mohamed.elkhatib@mtc.edu.om

1 Military Technical College, Kobry Elkobbah, Cairo, Egypt

2 The High Institute for Engineering and Technology, K21 Cairo/Belbeis Rd., Al-Obour, Egypt

3 Military Technological College, Muscat, Oman

are widely used due to their high power density, ability to respond quickly to changes in load, and almost zero emissions. Nevertheless, batteries also face constraints, such as low energy density and long charging times [5].

Hydrogen fuel cells are attractive for UAV propulsion because they provide high power and energy densities, long service lives, and produce low emissions, noise, and heat. However, their disadvantages include slow dynamic response, sensitivity to sudden load changes, and the need for a prolonged warm-up period to reach nominal power output. Based on earlier research, this paper proposes energy management strategies that integrate both batteries and fuel cells to maximize the advantages and minimize the drawbacks of these energy sources [6]. This strategy allows the Energy Management System (EMS) to control essential performance variables like current and voltage, thereby optimizing power management [7]. In this work, an EMS interfaced with a regulated system is designed and developed, employing two distinct control approaches.

1.2 Ethical considerations of using hydrogen fuel cells in UAVs

Beyond the technological aspects, it is crucial to consider the ethical implications of using hydrogen fuel cells in UAV operations. Hydrogen fuel cells are often perceived as an environmentally friendly power source because they do not emit carbon during use, significantly lowering their ecological impact compared to traditional internal combustion engines. However, the production of hydrogen, particularly when derived from non-renewable sources, can negatively affect the environment. For instance, hydrogen extraction methods like steam methane reforming can contribute to increased greenhouse gas emissions if not conducted responsibly.

Furthermore, the storage and transportation of hydrogen involve significant risks due to high-pressure storage requirements and the energy demands associated with maintaining those conditions. Despite these challenges, recent advancements in green hydrogen production, such as electrolysis powered by renewable energy sources, provide a promising direction for minimizing environmental harm.

1.3 Energy management technology for UAVs

UAVs using energy management technologies provide several benefits, including improved performance, dependability, and efficiency. Power distribution to propulsion, avionics, and payload systems is made efficient by EMS. Reducing power losses prolongs battery life, enabling UAVs to function for extended periods of time without needing to be recharged or refueled. makes sure the UAV uses energy as efficiently as possible by adjusting energy usage based on real-time power demands. Certain UAVs can improve total energy utilization by capturing and reusing energy (for example, during descent or deceleration). Ensure smooth operation by effectively managing a variety of energy sources, including solar panels, fuel cells, and batteries. Prioritize and alternate energy sources automatically according to efficiency, load demands, and availability.

In order to avoid over-discharge or overheating, which could result in system failures, EMS can monitor battery degradation, temperature, and charge levels. smartly distributes reserve energy to guarantee that electricity is available for vital systems in an emergency. UAVs' mission capabilities can be enhanced by optimizing energy consumption so they can save power for more payloads, such as more advanced sensors, cameras, or cargo. optimizes performance under various operational situations by modifying power allocation to meet certain mission requirements, such as delivery, mapping, or surveillance. ensures efficient use of energy by automatically adjusting to changes in flight dynamics (such as strong winds or a heavy load). UAVs stay relevant as technology advances thanks to energy management systems, which make it possible to integrate new technologies like more effective propulsion systems, sophisticated sensors, and AI-powered energy optimization algorithms.

This research outlines the development of the hybrid Energy Management System (EMS), which integrates the EMS concept with the design and control of energy source converters to establish a cohesive control scheme. Section (2) outlines the methodology of the contents of the work. Section (3) details the power requirements for UAV propulsion across various flight modes. In Sect. (4), the focus is on the design aspects of both interleaved and bidirectional converters. Section (5) discusses the characteristics and outcomes of the proposed EMS. Results and discussion of the of the proposed system is explained in Sect. (6). Finally, Sect. (7) provides a summary of the entire study and its conclusions.

2 Methodology

This research looks into energy management techniques for a hybrid electric UAV powered by a fuel cell and a lithium-ion battery system, with a BLDC motor as the propulsion mechanism. The major goal is to improve the UAV's endurance through effective energy management. The suggested system incorporates advanced power converters and two energy management strategies: fuzzy logic control and an adaptive neuro-fuzzy inference system (ANFIS), which are tested for performance comparison.

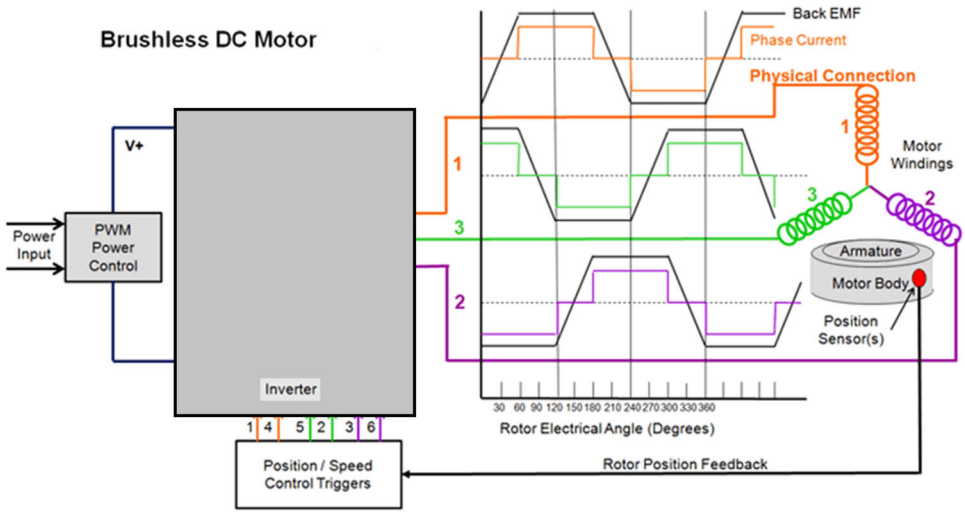

Fig. 1 Proposed electric propulsion system [9]

2.1 System architecture

The hybrid electric UAV system comprises the following components:

- Fuel Cell: Acts as the main energy source, and its output is controlled by an interleaved boost converter.
- Lithium-Ion Battery: serves as a second source of energy and is connected via a bidirectional DC/DC converter to regulate energy flow throughout cycles of charging and discharging.
- BLDC Motor: used to describe the load on the system for UAV propulsion.
- DC Bus: Maintains a stable voltage for system operations.

2.2 Energy management strategies

Two distinct energy management strategies are implemented and compared:

1. Fuzzy Logic Control: A rule-based system that dynamically modifies power flow according to input variables including battery state of charge (SOC) and load demand.
2. ANFIS: Fuzzy logic and neural networks are combined in this hybrid intelligent approach to improve power distribution under changing operational conditions.

2.3 Simulation framework

The complete system was modeled and simulated using MATLAB/Simulink. The following steps were followed:

- The interleaved boost converter for the fuel cell and the bidirectional converter for the battery were designed and integrated into the simulation environment.
- To govern the flow of electricity between the fuel cell, battery, and load, a fuzzy logic controller was created using a predetermined set of rules.
- In order to determine the best power distribution patterns, the ANFIS controller was trained using datasets created from the system's operating situations.
- To mimic real-world operating situations, simulation parameters were defined, including load changes, battery state of charge, and UAV mission patterns.

2.4 Performance evaluation

The system's performance was evaluated under various scenarios to assess:

- Power Flow: The distribution of power between the fuel cell, battery, and load.
- Hydrogen Consumption: The efficiency of the fuel cell in terms of hydrogen utilization.
- Battery Utilization: The stress on the battery during charge and discharge cycles.
- Response Time: The time taken by each energy management strategy to stabilize under dynamic load conditions.

2.5 Key metrics

The key comparative criteria were fuel cell power, battery power, load power, hydrogen consumption, and total energy efficiency. These outcomes were shown using time-domain plots, which highlighted the performance of fuzzy logic and ANFIS techniques under the same operating conditions.

Table 1 UAV specifications [10]

Parameter	Value
Maximum operating altitude	600 (m)
Rate of climb (R/C)	1 (m/s)
Stall speed (V_{stall})	8 (m/s)
Take-off distance (d)	20 (m)
Maximum lift coefficient ($C_{L_{max}}$)	1.25
Zero lift drag coefficient ($C_{D,0}$)	0.036
Maximum L/D ratio	16.4
Total mass	7.75 (kg)

Table 2 Required UAV speeds

Flying mode	Required speed (rpm)
Take-off	1867
Climb	2445
Cruise	3183
Endurance	3395
Maximum velocity	4277

Table 3 UAV power requirement

Flying mode	Nominal power (W)	DC bus input power
Take-off	266	335
Maximum rate of climb	154.2	205
Cruise	84.6	125
Endurance	53.3	85
Maximum velocity	250	315

3 Analysis of proposed electric propulsion system

The BLDC motor operates using an electronic commutation system, thereby eliminating the need for brush maintenance [8]. The configuration of the proposed electric propulsion system can be seen in Fig. 1 [9]. The specifications of the UAV are presented in Table 1. Based on these specifications, the required operating speeds are listed in Table 2, which were used to determine the necessary power. The power requirements for UAV propulsion are outlined in Table 3, leading to the selection of the motor whose specifications are provided in Table 4.

3.1 Proposed propulsion system mathematical modeling

The rotor of the BLDC motor is constructed from stainless steel. Due to the high resistivity of stainless steel, the rotor current was disregarded [11]. A topology scheme employing a three-phase symmetrical bridge inverter, illustrated in Fig. 2, enables the use of six switches. The voltage equations for a non-ideal six-switch three-phase inverter (SSTPI) are provided as follows [11].

Table 4 BLDC motor specifications [10]

Parameter	Value
Maximum speed (rpm)	8000
Torque peak (mN.m)	1160
Maximum continuous torque (mN.m)	463
Motor constant (mN.m/W$^{1/2}$)	103
Rotor inertia (g.cm^2)	230
Number of phases (delta configuration)	3
Number of poles	4
Phase-to-phase resistance (Ω)	0.25
Torque constant (mN.m/A)	50.4
Back EMF constant (V/(rad/s))	0.0504
Inductance (mH)	0.59

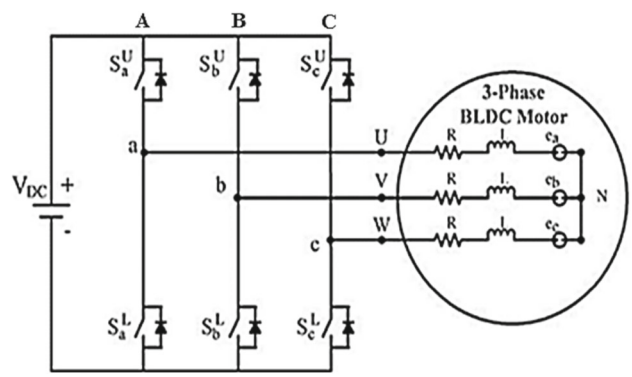

Fig. 2 Six-switch three-phase inverter BLDC Motor drive [12]

$$u_A = \left(R_a + R_{Ds_{(on)}}\right) i_a + \frac{d}{dt}\left(L_a\, i_a + M_{ab}\, i_b + M_{ac}\, i_c\right) + e_a \tag{1}$$

Similarly, the voltage from point B to N and point C to N are shown in Eqs. (2) and (3) respectively.

$$u_B = \left(R_b + R_{Ds_{(on)}}\right) i_b + \frac{d}{dt}\left(L_b\, i_b + M_{ba}\, i_a + M_{bc}\, i_c\right) + e_b \tag{2}$$

$$u_C = \left(R_c + R_{Ds_{(on)}}\right) i_c + \frac{d}{dt}\left(L_c\, i_c + M_{ca}\, i_a + M_{cb}\, i_b\right) + e_c \tag{3}$$

(u_A), (u_B), and (u_C) denote the terminal voltages for phases (a), (b), and (c) respectively, including the upper or lower non-ideal MOSFET when it is in the ON state. The phase

resistances for phases (a), (b), and (c) are represented as (R_a), (R_b), and (R_c). The resistance from drain to source when in the ON state is indicated by $(R_{Ds_{(on)}})$. The self-inductance values for phases (a), (b), and (c) are denoted as (L_a), (L_b), and (L_c). Mutual inductances are represented by (M_{ab}) and (M_{ac}) for phase (a) interacting with phases (b) and (c), respectively. Similarly, (M_{ba}) and (M_{bc}) describe the mutual inductance between phase (b) and the other phases, while (M_{ca}) and (M_{cb}) correlate to phase (c) and its mutual inductances. The back-EMFs for the respective phases (a), (b), and (c) are shown as (e_a), (e_b), and (e_c).

A salient-pole surface-mounted rotor is utilized in BLDC motors [13]. Therefore, we can set $(R_a = R_b = R_c = R)$, $(L_a = L_b = L_c = L)$, and $(M_{ab} = M_{ba} = M_{cb} = M_{bc} = M_{ac} = M_{ca} = M)$. Let (r) be defined as $(R_a + R_{Ds_{(on)}})$. By inserting these values into Eq. (1), we can derive the required results.

$$u_A = r\ i_a + L\ \frac{di_a}{dt} + M\ \frac{di_b}{dt} + M\ \frac{di_c}{dt} + e_a \tag{4}$$

Similarly,

$$u_B = r\ i_b + L\ \frac{di_b}{dt} + M\ \frac{di_a}{dt} + M\ \frac{di_c}{dt} + e_b \tag{5}$$

$$u_C = r\ i_c + L\ \frac{di_c}{dt} + M\ \frac{di_a}{dt} + M\ \frac{di_b}{dt} + e_c \tag{6}$$

The three phases' current equation can be written as

$$i_a + i_b + i_c = 0 \tag{7}$$

Eq. (4) can be further simplified as:

$$u_A = r\ i_a + (L - M)\ \frac{di_a}{dt} + e_a \tag{8}$$

Similarly,

$$u_B = r\ i_b + (L - M)\ \frac{di_b}{dt} + e_b \tag{9}$$

$$u_C = r\ i_c + (L - M)\ \frac{di_c}{dt} + e_c \tag{10}$$

Let m = L − M. Next, the SSTPI BLDC motor's voltage equation matrix form can be written as follows:

$$\begin{bmatrix} u_A \\ u_B \\ u_C \end{bmatrix} = \begin{bmatrix} \mathrm{r} & 0 & 0 \\ 0 & \mathrm{r} & 0 \\ 0 & 0 & \mathrm{r} \end{bmatrix} \begin{bmatrix} i_a \\ i_b \\ i_c \end{bmatrix} + \begin{bmatrix} m & 0 & 0 \\ 0 & m & 0 \\ 0 & 0 & m \end{bmatrix} \frac{d}{dt} \begin{bmatrix} i_a \\ i_b \\ i_c \end{bmatrix} + \begin{bmatrix} e_a \\ e_b \\ e_c \end{bmatrix} \tag{11}$$

Hence in state space form:

$$\frac{d}{dt} \begin{bmatrix} i_a \\ i_b \\ i_c \end{bmatrix} = \begin{bmatrix} \frac{1}{m} & 0 & 0 \\ 0 & \frac{1}{m} & 0 \\ 0 & 0 & \frac{1}{m} \end{bmatrix} \left[\begin{bmatrix} u_A \\ u_B \\ u_C \end{bmatrix} - \begin{bmatrix} r & 0 & 0 \\ 0 & r & 0 \\ 0 & 0 & r \end{bmatrix} \begin{bmatrix} i_a \\ i_b \\ i_c \end{bmatrix} - \begin{bmatrix} e_a \\ e_b \\ e_c \end{bmatrix} \right] \tag{12}$$

3.2 Analysis and design of a DC-link voltage buck converter

Connecting a DC buck converter to a BLDC motor drive as a DC-link offers several advantages. The buck converter ensures the BLDC motor receives a stable and controlled voltage, regardless of fluctuations in the input power source (e.g., battery, fuel cell). This is critical for optimal motor performance and efficiency. The buck converter ensures the BLDC motor receives a stable and controlled voltage, regardless of fluctuations in the input power sources. By stepping down the input voltage to the optimal level required by the motor drive, the buck converter minimizes power losses and improves the overall system efficiency. A well-regulated DC-link voltage simplifies the control algorithms for the BLDC motor drive. It allows for more precise modulation of the inverter's pulse-width modulation (PWM), improving the motor's performance. The buck converter can adjust the DC-link voltage dynamically to suit the specific speed-torque characteristics of the BLDC motor, enabling efficient operation under varying load conditions. This is critical for optimal motor performance and efficiency.

Considering the voltage across the diode, denoted as (V_{DF}), and the output voltage of the transistor, represented as (V_{out}), this is illustrated in Eq. (13). The output voltage ripple, (V_{ripple}), is intended to be 1% of (V_{out}), and the minimum output current, (I_{min}), is assumed to be 10% of (I_{out}). The voltage drop across $(R_{Ds_{(on)}})$ is described in Eq. (14).

$$D = \frac{V_{\text{out}} + V_{DF}}{V_{\text{in}} - V_{Ds_{(on)}}} \tag{13}$$

$$V_{Ds_{(on)}} = R_{Ds_{(on)}}\ I_{\text{out}} \tag{14}$$

Switching period (T) is:

$$T = 1/f_{sw} \tag{15}$$

The output capacitance at minimum $\left(C_{\text{out(min)}}\right)$ is:

$$C_{\text{out}} \geq C_{\text{out(min)}}\ , \quad C_{\text{out(min)}} = \frac{2\ I_{\text{min}}\ T}{8\ V_{\text{ripple}}} \tag{16}$$

The inductor value at minimum (L_{Critical}) is:

$$L \geq L_{Critical}, \quad L_{Critical} = \frac{\left(V_{in} - V_{out} - V_{Ds_{(on)}}\right)\ T_{on}}{2\ I_{\min}} \tag{17}$$

where T_{on} represents the time the system is in the "on" state, and f_{sw} denotes the switching frequency. The BLDC motor control circuit is equipped with two PI controllers-one for speed control and the other for current control. The mathematical representation of the PI controller is given by:

$$\text{u(t)} = K_p e(t) + K_i \int_0^t e(\tau) d\tau \tag{18}$$

where: K_p represents the proportional gain, which is a tuning parameter, and K_i is the integral gain, also a tuning parameter. The term $e(t) = SP - PV(t)$ indicates the error, where SP is the set-point, and $PV(t)$ is the process variable. The variable t refers to time, specifically the present or instantaneous time, while τ is the integration variable that takes values from time 0 up to the current time t. A PI speed controller is employed to match the reference velocity $\left(\omega_{ref}\right)$-which is the desired motor speed-with the actual motor speed (ω).

4 Power converters design and control

Power converters play a vital role in the electric power systems and energy management systems of UAVs. With their many benefits that improve performance and dependability, power converters are crucial parts of UAVs' electric power and energy management systems. They facilitate effective voltage conversion and regulation, guaranteeing interoperability across different UAV subsystems as sensors, avionics, and propulsion motors. These gadgets maximize battery efficiency and prolong the UAV's operational duration by reducing energy losses during power conversion. In order to lessen reliance on primary energy sources, power converters also make it easier to incorporate renewable energy sources-like solar panels and fuel cells-into hybrid power systems.

They also help with load balancing and efficient battery management by stabilizing the power supply and shielding delicate components from voltage swings. Their small size and light weight help to optimize total weight, which is essential for UAV effectiveness. Furthermore, because they allow for quick reaction to changing power demands and accurate control, power converters are essential components of electric propulsion systems. All things considered, their effectiveness and versatility are essential for contemporary UAV applications, guaranteeing dependable and energy-efficient functioning. The BLDC motor was chosen as the propulsion motor for the UAV, as described in the previous section. A boost converter connects the fuel cell (FC) stack to the DC bus, whereas a bidirectional DC/DC converter is used to link the battery pack to the system. The Li-Ion battery is utilized when additional load power beyond what the FC can provide is required. Additionally, the battery helps to maintain propulsion during transient conditions. The battery capacity C_B in the hybrid electric power system is determined by the bidirectional converter selection procedure.

Table 5 Selected battery pack specification [10]

Parameter	Value
Fully charge voltage	12.2 V
Minimum voltage	10 V
Rated capacity	14 Ah
Charging voltage	13.3 V
Internal resistance	0.021 Ω
Nominal discharge current	2.17 A
Dimensions(mm)	161 × 115 × 56
Weight	950 g

As a design concern, the bidirectional converter input voltage is adjusted between 10 and 13 V, whereas the suggested hybrid power system has a 24 V DC bus voltage. As a result, a 12 V Li-Ion battery is chosen as the backup power supply. At the battery minimum voltage, which denotes the battery's lowest energy capacity, the necessary battery capacity is calculated. The relationship between battery voltage and capacity under specific power conditions is depicted in Eq. (19). To avoid damage from excessive current, the maximum discharging current is restricted to (0.5−0.7) C_B. The specification of the battery pack is listed in Table 5.

$$C_B = \frac{P_{DC}}{0.7 \cdot \eta_{BDC} \cdot V_{\text{bat.min.}}} \tag{19}$$

The hybrid system's main source of power is the PEM fuel cell system. Throughout the mission, the fuel cell system serves as the primary power supply unit, producing electricity continually. The maximum power of the PEM fuel cell system is 150 W. To achieve 125 W of cruising power and 86 W of endurance power, a commercially available Horizon H-100 PEM fuel cell system is chosen. The fuel cell system has 24 cells with rated voltages of 14 V and 7.2 A. The input voltage of the fuel cell system ranges from 13 to 23V. A hydrogen flow rate of 1.4 liters per minute is necessary for the PEM fuel cell system, and the supply hydrogen pressure should be between 0.4 and 0.6 bars. The specifications for the FC stack is listed in Table 6.

Table 6 Selected fuel cell stack specifications [14]

Parameter	Value
Number of cells	24
Rated power	100 W
Maximum power	150 W
Rated voltage	14 V
Rated current	7.2 A
Output voltage range	13–23 V
Weight	0.95 Kg
Rated H_2 gas consumption	1.4 l/min
Hydrogen pressure	0.4−0.6 bar
Max stack temperature	65 °C
Hydrogen purity	99.999%
Efficiency of system	40 % @ 14 V

Table 7 Interleaved boost converter design specifications

Parameter	Value
Maximum power (W)	150
Maximum input voltage (V)	18
Minimum output voltage (V)	13
Regulated voltage output (V)	24
Percentage of peak current ripple (%)	1
Percentage of voltage ripple (%)	2
Switching frequency (Hz)	20,000

4.1 Interleaved boost converter

To ensure that each power stage delivers an equal share of power, the interleaved boost converter (IBC) uses regulated current distribution between stages. Therefore, in an interleaved design, both channels should have matching inductors and diodes, meaning that each inductor will have the same inductance value; $L_1 = L_2 = L$. The duty cycles for Q_1 and Q_2 are assumed to be identical and are represented by D_1 and D_2, i.e., $D_1 = D_2 = D$. The IBC operates in either continuous or discontinuous mode, depending on the conditions. The specifications for the IBC are provided in Table 7.

The capacitive and inductive components of the IBC are designed to meet full power requirements. Depending on its operating characteristics, the fuel cell (FC) output voltage can range between 13 V and 18 V. The maximum duty ratio (D_{max}) for the pulse width modulation (PWM) is determined when the FC voltage is at its minimum value ($V_{FC(min)} = 13$ V), as given in Eq. (20). Interleaved boost converter Schematic Diagram is shown in Fig. 3.

When the FC output voltage reaches its maximum ($V_{FC(max)} = 18$ V), the minimum conduction time is added by reducing the PWM duty ratio, which is calculated using

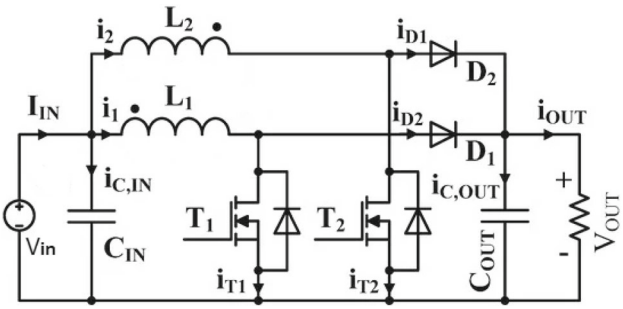

Fig. 3 Interleaved boost converter Schematic Diagram

Eq. (21). The resulting IBC duty ratio range is between $0.25 \leq D_t \leq 0.46$. The output current (I_o) of the converter is based on the output power (cruise power) and the regulated output voltage, as described in Eq. (22). The average inductor current ($I_{L(\text{avg})}$) and the ripple current (ΔI_L) for each phase are calculated using Eqs. (23) and (24), respectively.

$$D_{max} = 1 - \frac{V_{FC(min)}}{V_{DC(bus)}} \tag{20}$$

$$D_{min} = 1 - \frac{V_{FCmax}}{V_{DC(bus)}} \tag{21}$$

$$I_o = \frac{P_o}{V_o} \tag{22}$$

$$I_{L(\text{avg})} = \frac{0.5\ I_o}{1 - D_{\max}} \tag{23}$$

$$\Delta I_L = 2 \times (0.01) \times I_{L(\text{avg})} \tag{24}$$

$$L = \frac{V_{in(\min)}\ D_{\max}}{\Delta I_L\ F_s} \tag{25}$$

The DC bus capacitor ($C_{DC(bus)}$) stores energy during Continuous Conduction Mode (CCM) when Q_1 is in the OFF state and releases this energy once Q_1 switches ON. The ripple voltage has a magnitude equivalent to 2% of the output voltage, resulting in $V_o = 0.48$ V. The switching frequency (F_s) effectively doubles when the output capacitor combines all phases. The value of the output capacitor $C_{DC(bus)}$ can be calculated using Eq. (26).

$$C_{DC(bus)} = \frac{I_o\ D_{\max}}{\Delta V_o\ (2F_s)} \tag{26}$$

In conclusion, the interleaved boost converter has a number of benefits over the conventional boost converter, especially for applications like UAV power systems that demand high power and efficiency. The interleaved design greatly lowers input current ripple by using numerous parallel switching circuits, which lessens input source stress and increases its longevity. Additionally, by dividing the electrical and thermal load among several parts, this arrangement improves dependability and thermal management. Additionally, by lowering switching and conduction losses, the

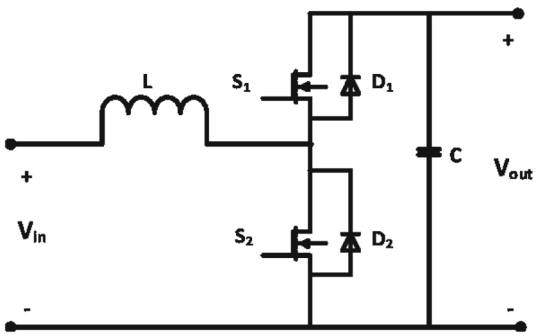

Fig. 4 Schematic diagram of bidirectional converter

interleaved boost converter raises overall efficiency. It can be scaled to meet different power demands because to its modular design.

4.2 Bidirectional converter design and control

Bidirectional converters provide significant benefits for effective power flow and system flexibility, making them essential components of hybrid UAV energy management systems. They make it possible for energy to move smoothly between the UAV's power sources, like fuel cells or solar panels, and energy storage devices, including batteries and supercapacitors. Dynamic power balancing is supported by this dual-direction capability, which guarantees energy availability during periods of high demand and permits regenerative energy recovery during descent or deceleration.

Bidirectional converters extend battery life and improve system efficiency by optimizing charge and discharge cycles. They are crucial for hybrid UAVs that need precise energy management for prolonged operation and a variety of mission profiles because of their high efficiency and quick reaction to power variations, which enhance dependability and performance.

The bidirectional converter (BDC) adjusts the battery current flow path to meet load power requirements. During conditions of high power demand or at startup, the BDC boosts the battery voltage (boost mode), while during charging, the BDC operates in buck mode. The specifications for designing the bidirectional converter are provided in Table 8.

4.2.1 Bidirectional converter boost mode operation

The duty cycle D is determined from the voltages of the LV side and the HV side.

$$D = \frac{V_{o(\max)} - \eta V_{in(nom)}}{V_{o(\max)}} \tag{27}$$

The maximum duty cycle D_{max} would, thus, be:

$$D_{max} = \frac{V_{o(\max)} - \eta V_{in(min)}}{V_{o(\max)}} \tag{28}$$

For boost configuration, The HV side DC bus current I_o:

$$I_o = \frac{P_o}{v_o} = \frac{P_{L(max)} - P_{FC(max)}}{v_o} \tag{29}$$

The LV side current I_{Bat}, which is the battery output current, is determined as follows:

$$I_{Bat} = \frac{I_o}{1 - D} \tag{30}$$

The ripple of the peak-to-peak inductor current would be:

$$\Delta\ I_L = 2 \times 0.01 \times I_{L(\max)} \tag{31}$$

$$\Delta\ I_L = 2 \times 0.01 \times \frac{I_o}{1 - D_{\max}} \tag{32}$$

The inductance value is:

$$L = \frac{V_{\text{in(min)}}\ D_{\max}}{\Delta I_L\ F_s} \tag{33}$$

The HV side capacitor value can be calculated:

$$C_{\text{high}} = \frac{I_o\ D_{\max}}{\Delta V_o\ F_s} \tag{34}$$

4.2.2 Bidirectional converter buck mode operation

Bidirectional converters are essential to hybrid UAV energy management systems because they facilitate effective energy transfer and guarantee system adaptability. They facilitate power transfer from energy storage systems (such as batteries and supercapacitors) to the UAV's subsystems and back during regenerative operations because, in contrast to unidirectional converters, they permit energy to flow in both directions.

Because it allows for dynamic power balancing between various energy sources, such batteries, fuel cells, or solar panels, and load demands, this dual-direction capability is essential for hybrid UAVs. The schematic diagram of the proposed BDC is illustrated in Fig. 4. In the charging phase, the BDC enters buck mode, where the active component is MOSFET Q_3, while Q_2 remains passive. The PWM duty ratio for Q_3 is calculated using Eq. (35), assuming a minimum voltage of $V_{Bat(min)} = 10$ V. The required maximum duty cycle, corresponding to a battery voltage of 12.2 V, is presented in Eq. (36). The BDC is controlled to regulate the

Table 8 Bidirectional converter design specifications

Boost configuration	Parameter	Value
Buck configuration	Minimum input LV (V)	10
	Maximum input LV (V)	12.2
	Nominal input LV (V)	12
	Minimum output HV (V)	16
	Maximum output HV (V)	30
	Output LV (V)	13.3
	Input HV (V)	24
	Converter efficiency (%)	95
	Percentage of peak current ripple (%)	1
	Percentage of maximum HVS voltage ripple (%)	2
	Switching frequency (Hz)	20,000

DC voltage and facilitate both battery charging and discharging operations [15].

$$D_{min} = \frac{V_{Bat(\min)}}{V_{DC(bus)}} \tag{35}$$

$$D_{max} = \frac{V_{Bat(\max)}}{V_{DC(bus)}} \tag{36}$$

The voltage ripple is to be 2% around the V_{Low}.

$$C_{LV} = \frac{V_{Low}\,(1 - D_{buck})}{8\,L\,F_s^2\,\Delta V_{Low(max)}} \tag{37}$$

The bidirectional converter effectively draws extra power from storage to suit the UAV's operational requirements during times of high energy consumption, including takeoff or quick maneuvers. On the other hand, the converter enables regenerative energy recovery during low-power periods, such braking or descent, returning the extra energy to storage systems for future use. By preserving stored energy, this feature not only increases energy efficiency but also increases the UAV's operational durability.

Additionally, bidirectional converters' precise control maximizes battery charge and discharge cycles, prolonging battery life and minimizing wear. Even in situations when conditions fluctuate, power supply is stable due to their capacity to react swiftly to changes in power requirements. Bidirectional converters are an essential part of hybrid UAVs that need great efficiency and dependability since they also reduce energy losses during power transmission, which increases system efficiency overall.

In conclusion, bidirectional converters are crucial for contemporary hybrid UAV systems that seek to optimize energy utilization and reliability because they enable hybrid UAVs to achieve increased energy efficiency, enhanced operational performance, and longer flight times. Their adaptability supports a wide range of mission profiles, guaranteeing that the UAV can effectively adapt to varying power demands and environmental conditions.

5 Proposed energy management system

Hybrid electric UAVs are highly dependent on the Energy Management System (EMS) [16]. For the small UAV fuel cell hybrid system described in Table 1, this study presents a comparison between two different EMS strategies. The hybrid system consists of a fuel cell (FC), a lithium-ion battery, and DC/DC converters. Managing energy flow in this hybrid electric power system, especially in response to changes in load demand and battery State of Charge (SOC), is a critical aspect of these strategies [17]. The two energy management schemes compared include a rule-based fuzzy logic control approach and an intelligent strategy utilizing an adaptive neuro-fuzzy inference system (ANFIS). The Proposed hybrid electric system for the UAV is depicted in Fig. 5.

Two primary performance metrics are used for comparison: hydrogen consumption and battery SOC. An effective EMS should aim to maximize fuel efficiency while ensuring responsible usage of each energy source. To optimize energy usage in the hybrid system, the EMS monitors variations in both transient load current and fuel cell power. These analyses provide deeper insights into how the EMS functions and how power is managed in hybrid power systems [16].

5.1 Proposed energy management system architecture

The architecture of the hybrid model includes a primary fuel cell (FC) source and secondary Li-Ion battery packs. The design requirements for energy management are detailed in Table 9. The EMS should achieve several objectives, including an extended system lifespan, optimal system performance, minimized hydrogen consumption, and a limited

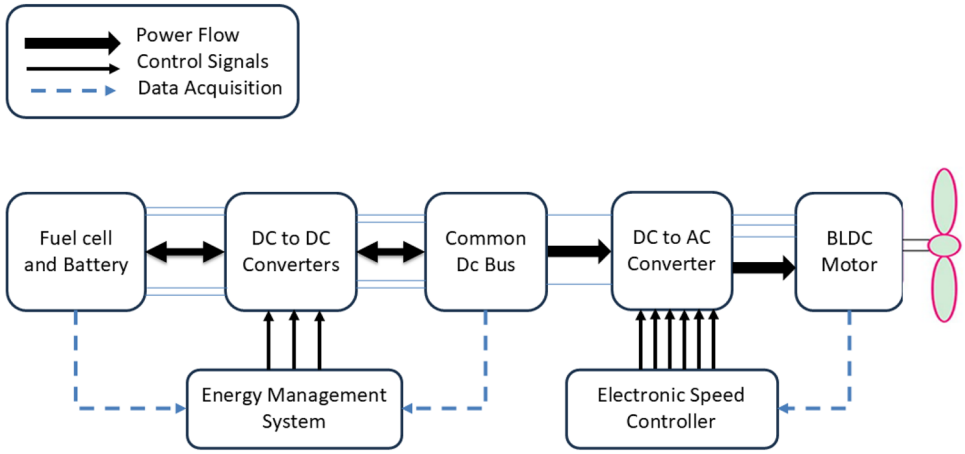

Fig. 5 Proposed hybrid electric system for UAV

Table 9 Design requirements for energy management system

Energy management design requirements	Value
Fuel cell converter output power [$P_{fc(min)}$ - $P_{fc(max)}$] (Watt)	72.17–125
Battery SOC [SOC_{min} - SOC_{max}] (%)	60–90
DC bus voltage [V_{DC}] (V)	24

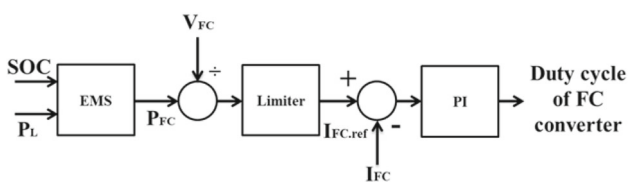

Fig. 6 Fuel cell converter control scheme

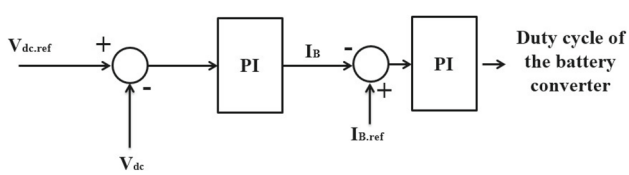

Fig. 7 Battery converter control scheme

range of battery State of Charge (SOC). The EMS assesses the reference power for the fuel cell, with this reference power and voltage defining the current of the FC, bounded by its maximum and minimum values [18]. The unidirectional duty cycle is determined using the error between the reference current and the actual FC current. Figure 6 depicts the control scheme for the fuel cell converter as a subsystem of the overall EMS. For both EMS strategies, the V_{DC} is regulated, as illustrated in Fig. 7.

The PI controller gains, tuned using a genetic algorithm, compute the bidirectional duty ratio and facilitate both battery charging and discharging operations [18]. The subsequent sections provide a detailed examination of the EMS strategies used to determine the reference FC power. The rule-based fuzzy logic (RBFL) control strategy uses SOC

Table 10 Fuzzy logic control rules

Fuzzy logic control rules		
SOC $High$	& P_{Low} $Very\ Low$	$P^{\star}_{fc} = Very\ Low$
SOC $High$	& P_{Low} Low	$P^{\star}_{fc} = Low$
SOC $High$	& P_{Low} $Medium$	$P^{\star}_{fc} = Medium$
SOC $High$	& P_{Low} $High$	$P^{\star}_{fc} = High$
SOC $Medium$	& P_{Low} $VeryLow$	$P^{\star}_{fc} = Very\ Low$
SOC $Medium$	& P_{Low} Low	$P^{\star}_{fc} = Low$
SOC $Medium$	& P_{Low} $Medium$	$P^{\star}_{fc} = Medium$
SOC $Medium$	& P_{Low} $High$	$P^{\star}_{fc} = High$
SOC Low	& P_{Low} $VeryLow$	$P^{\star}_{fc} = Low$
SOC Low	& P_L Low	$P^{\star}_{fc} = Medium$
SOC Low	& P_L $Medium$	$P^{\star}_{fc} = High$
SOC Low	& P_L $High$	$P^{\star}_{fc} = High$

membership functions (MFs) and load power, along with IF-THEN rules to decide on fuel cell power output. The design is developed using a method similar to [18], in which trapezoidal MFs are applied. The approach of Mamdani's fuzzy inference with the centroid method for defuzzification is used. The rules are based on the "and" method between them. Table 10 shows fuzzy logic rules.

The ANFIS, on the other hand, combines artificial neural networks (ANN) with fuzzy logic techniques to establish the reference FC power. This method integrates feedback data with human expertise. The adaptability of ANFIS lies in its hybrid learning algorithm, which combines gradient descent

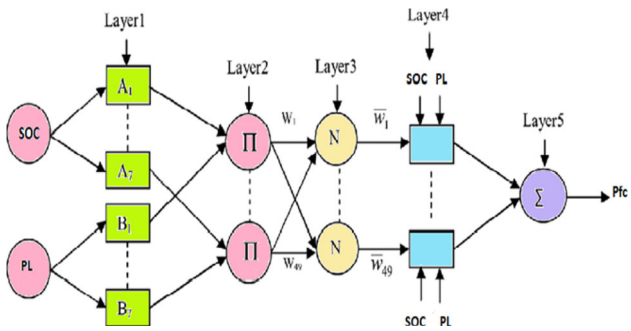

Fig. 8 Architecture of adaptive-neuro-fuzzy Controller

for optimizing neural network weights and least squares estimation for fine-tuning the fuzzy membership functions. These mechanisms ensure that the system learns from input–output data and reduces prediction errors iteratively. The flexibility of ANFIS is especially evident in its capacity to adjust membership function parameters and fuzzy rules in response to novel patterns found in the training set.

Without the need for human intervention, ANFIS can adapt to changing circumstances and enhance its predictive abilities by learning directly from datasets. Its efficiency and adaptability are increased by this data-driven approach, which makes it appropriate for dynamic, complicated systems. Furthermore, following training, ANFIS generalizes well to unseen data, guaranteeing dependable performance in practical applications. Combining the accuracy of neural networks with the adaptability of fuzzy systems, ANFIS provides a potent solution for tasks like forecasting, optimization, and control systems by dynamically adjusting to changing issues. The proposed ANFIS controller architecture is shown in Fig. 8, which consists of five distinct layers [19]. In order to generate crisp outputs, ANFIS is organized into five layers: crisp input processing, fuzzification, rule application, normalization, and defuzzification. The system can effectively map inputs to outputs thanks to this architecture's dynamic parameter adjustments. In the architecture, fixed nodes are represented by circles, while adaptive nodes are depicted as squares.

ANFIS allows for quick tuning and rule generation. It utilizes If-Then rules and Sugeno's fuzzy inference technique, with the final outcome being a weighted sum of each rule's output [16]. The simulation defines MFs based on training data. Both battery SOC and load power have seven MFs each. In fuzzification layer 1, the inputs are fuzzified using Eq. (38).

$$\mu = \max\left(\min\left(\frac{x-a}{b-a}, 1, \frac{d-x}{d-c}\right), 0\right) \tag{38}$$

x represents a crisp value within the defined range. The four trapezoidal membership function heads are denoted by a, b, c, and d, and the degree of MF output for this layer is calculated accordingly.

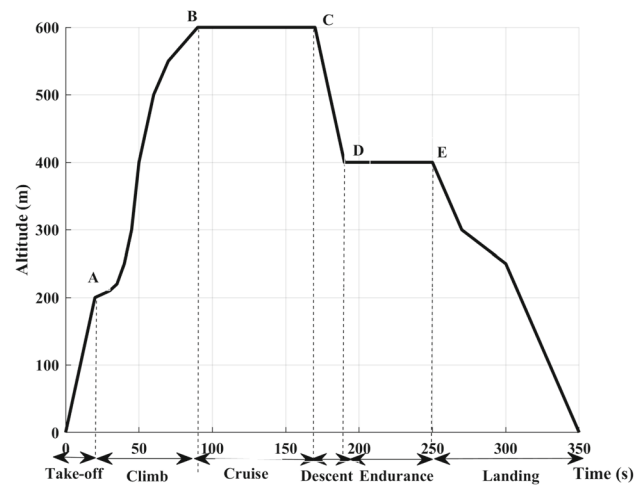

Fig. 9 Proposed UAV mission profile

$$O_{L1,i} = \mu A_i(SOC) \quad i = 1, 2, \ldots, 7 \tag{39}$$

$$O_{L1,j} = \mu B_j(P_L) \quad j = 1, 2, \ldots, 7 \tag{40}$$

In layer 2, the output of each node denotes the firing strength for the subsequent node, which involves performing a fuzzy logical AND operation. The expression for this layer is given by Eq. (41), with k subject to 49 fuzzy rules. Layer 3 is responsible for normalizing the input weights, as described by Eq. (42), resulting in the normalized firing strengths. Layer 4 performs defuzzification, where the output is determined by Eq. (43), using parameters u_k, s_k, and r_k. Finally, Layer 5 calculates the total output by combining all input signals, as shown in Eq. (44) [16].

$$W_k = O_{L2,k} = \mu A_i(SOC) \cdot \mu B_j(P_L) \tag{41}$$

$$\overline{W}_k = O_{L3,k} = \frac{W_k}{\sum_k W_k} \tag{42}$$

$$\overline{W_k} f_k = O_{L4,k} = \frac{W_k}{\sum_k W_k}\left[r_k(SOC) + s_k(P_L) + u_k\right] \tag{43}$$

$$f = O_{L5,k} = \sum \overline{W_k} f_k = \frac{\sum W_k f_k}{\sum W_k} \tag{44}$$

6 Results and discussion

A comparison of the two EMS strategies was conducted to understand their strengths, weaknesses, and limitations in different scenarios. The simulations began with the initial conditions set as BSOC = 75%, battery temperature = 30°, FC voltage = 14V, and FC temperature = 40°. Figure 9 presents a test case simulating the entire UAV mission.

6.1 Power system model aligned with the UAV mission profile

The mission profile began with take-off (from point 0 to A) and included phases such as climb (A to B), cruise (B to C), descent (C to D), endurance (D to E), and finally, landing (E to 0). Each phase imposes distinct power requirements on the propulsion and onboard systems. During takeoff, the UAV requires a significant power surge to overcome initial inertia and achieve lift-off. This is primarily supplied by the battery through the bidirectional DC/DC converter to ensure high power availability. During the climb and cruise phases, the power demand gradually decreases, and steady-state cruise conditions are achieved, requiring lower but sustained power levels. In descent and landing phases, the power demand drops significantly, as indicated in the mission profile. The battery takes over in certain scenarios to ensure smooth transitions and optimal SOC utilization.

To ensure accurate modeling and simulation of the power management system, the UAV mission profile has been carefully mapped to the power system's operational needs. Simulation outcomes for the RBFL strategy are presented in Figs. 10, 11, and 12. When the load power falls below cruising power (125 W), the DC bus voltage exceeds the reference value of 24 V, prompting the DC bus voltage regulator to generate a negative current to recharge the battery. As the load power rises above 125 W, a sudden shift in battery response occurs before stabilizing at the desired power level. Although hydrogen consumption remains low, the battery experiences significant stress, with SOC fluctuating between 75 and 69.88%, while the FC exhibits a faster response.

The ANFIS control strategy simulation results are shown in Figs. 13, 14, and 15. Under this approach, the FC operates in a relatively constant manner, leading to more frequent recharging of the battery. Despite higher hydrogen consumption, the FC undergoes maximum stress, whereas the SOC remains between 75 and 70.21%. This strategy provides superior battery transient response.

6.2 Strategies validation and adaptability

Figures 10 and 13 show a sudden peak in battery power after 250 s, indicating a transient reaction in the energy management system produced by a large change in load power demand. During this time, the fuel cell, as the principal power source, produces a reasonably consistent power output, most likely due to its slower dynamic response. As a result, the battery, which serves as the secondary energy source, compensates for the current power shortage by rapidly increasing output. This behavior highlights the battery's vital role in dealing with abrupt power surges and maintaining the stability of the UAV's energy system. Figure 13, which depicts the outcomes of the ANFIS, shows that the battery's peak response is more efficiently handled than the other strategy, which only uses fuzzy logic.

ANFIS displays great adaptability by dynamically altering power allocation between the fuel cell and the battery to reduce stress on the energy storage system. This optimized reaction minimizes the amplitude and length of the battery's peak, demonstrating ANFIS' capacity to improve overall system performance and reliability under unexpected load periods. The better coordination between the energy sources results in smoother power delivery and a longer battery life. A comparative summary of the two approaches is given in Table 11. Hydrogen utilization and mass consumption are essential factors for assessing the performance of a fuel cell in hybrid energy systems.

According to Table 11, the hydrogen utilization is defined as the ratio of hydrogen actively utilized in the electrochemical reaction to total hydrogen supplied, which is an important measure of the fuel cell's operational efficiency. Meanwhile, mass consumption quantifies the entire amount of hydrogen depleted over time, which has a direct impact on the system's endurance and autonomy. Energy usage refers to how much of the battery's stored energy is discharged to fulfill system power demands, demonstrating its contribution to power balance. Battery stress, on the other hand, results from rapid charging or discharging cycles, which are frequently induced by unexpected load fluctuations, putting mechanical and chemical strain on the battery. Prolonged or extreme stress can accelerate degradation, limiting battery life and compromising energy system reliability. Effective energy management solutions are thus required to maximize hydrogen usage, minimize mass consumption, and reduce battery stress, ensuring system efficiency and lifespan.

When all four performance parameters are considered, FLC performs better in terms of hydrogen conservation efficiency. With 74.9% hydrogen utilization, compared to ANFIS's higher utilization of 82.86%. This demonstrates FLC's potential benefit in systems where hydrogen fuel preservation is crucial. However, ANFIS's greater utilization rate means that it produces more energy per unit of hydrogen, making it more suited for applications that require high energy efficiency. Fuel cell stack consumption of 1.5 (lpm) over 1 h using ANFIS, the hydrogen mass consumption will be approximately 0.07263 kg. But, using FLC, it will be 0.0581 kg.

In terms of battery performance, ANFIS outperforms FLC, with a smaller Battery SOC Scope (75−70.21%) and lower Battery Energy Utilization (6.39%). These figures demonstrate ANFIS's capacity to more accurately regulate energy utilization, decreasing battery stress and increasing operating lifespan. While FLC exhibits more hydrogen conservation, ANFIS delivers more efficient overall system energy management.

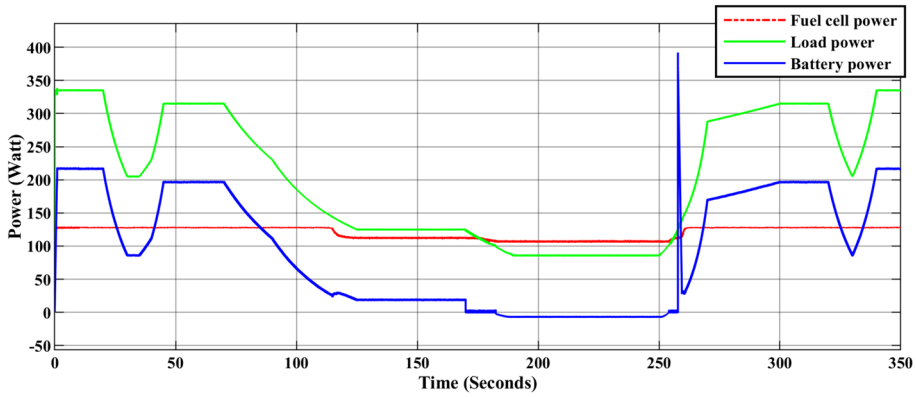

Fig. 10 Fuzzy logic results on power flow

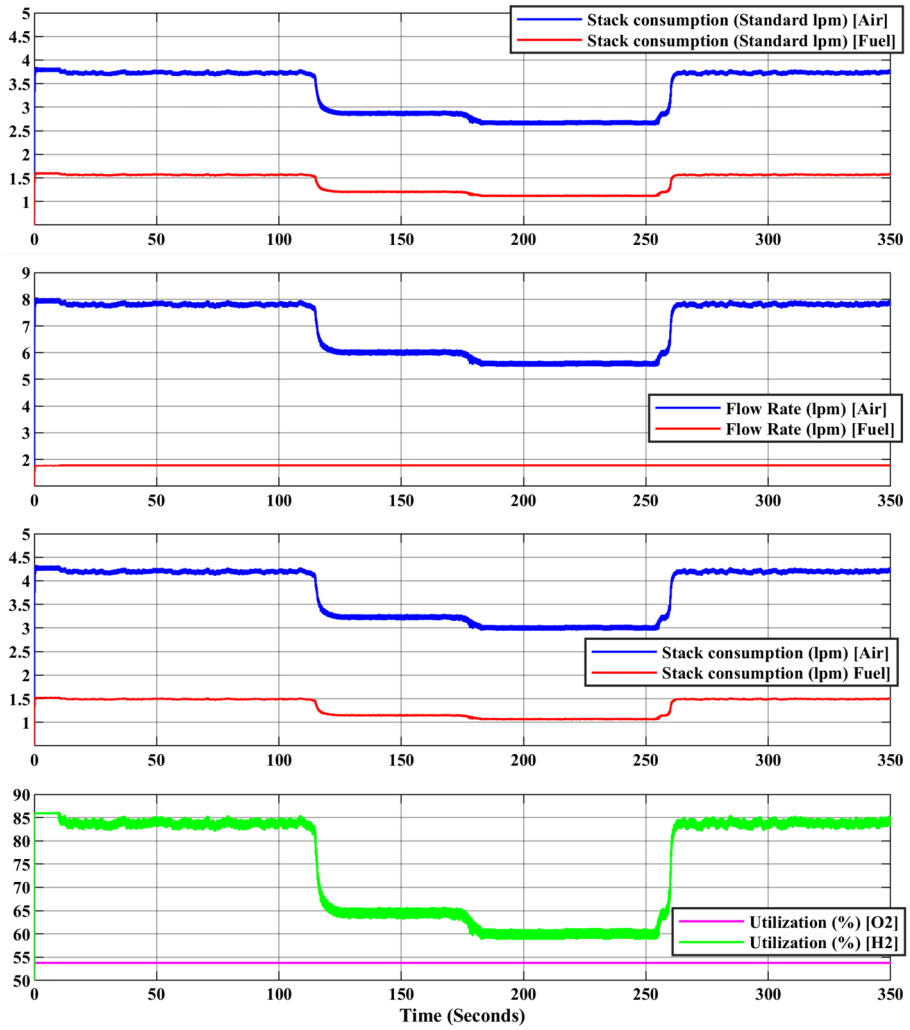

Fig. 11 Fuzzy logic results on hydrogen consumption

FLC's performance reflects its simplicity and durability, making it excellent for systems that prioritize hydrogen conservation over maximum energy output. Its rule-based decision-making enables constant and predictable energy management, reducing fuel consumption at the expense of slightly increased battery stress and overall SOC variation. FLC is especially useful in systems where fuel supplies are limited and operational longevity is crucial.

On the other hand, ANFIS' hybrid architecture enables adaptive optimization, making it an effective tool for systems that require high energy efficiency. Its capacity to automatically modify based on real-time data results in more exact energy utilization, as indicated by improved battery metrics.

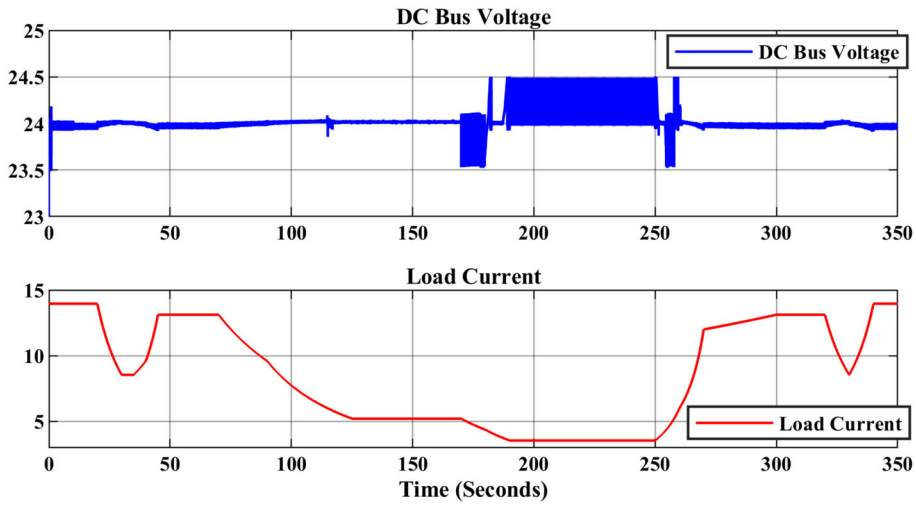

Fig. 12 Fuzzy logic results on DC bus voltage and load current

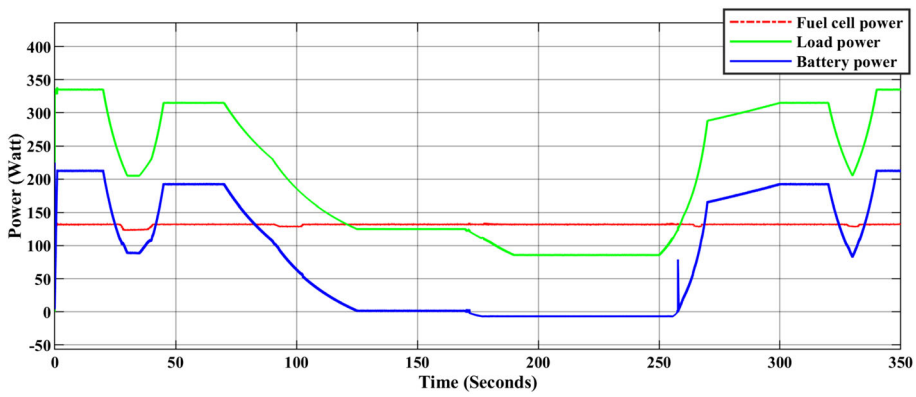

Fig. 13 Adaptive neuro-fuzzy results on power flow

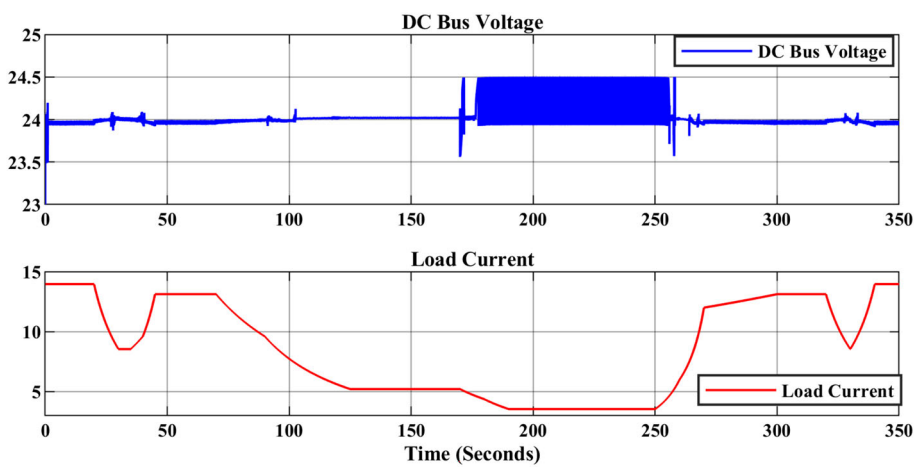

Fig. 14 Adaptive neuro-fuzzy results on DC bus voltage and load current

However, this comes at a cost: increased hydrogen consumption. ANFIS is most suited for applications that require peak performance and energy economy, where fuel availability is less of an issue.

6.3 Design validation with mission profile

Each strategy met the energy management criteria as outlined in Table 9. The simulation results confirm that the proposed power system model and energy management strategies:

- Effectively distribute power during the UAV's dynamic mission phases.

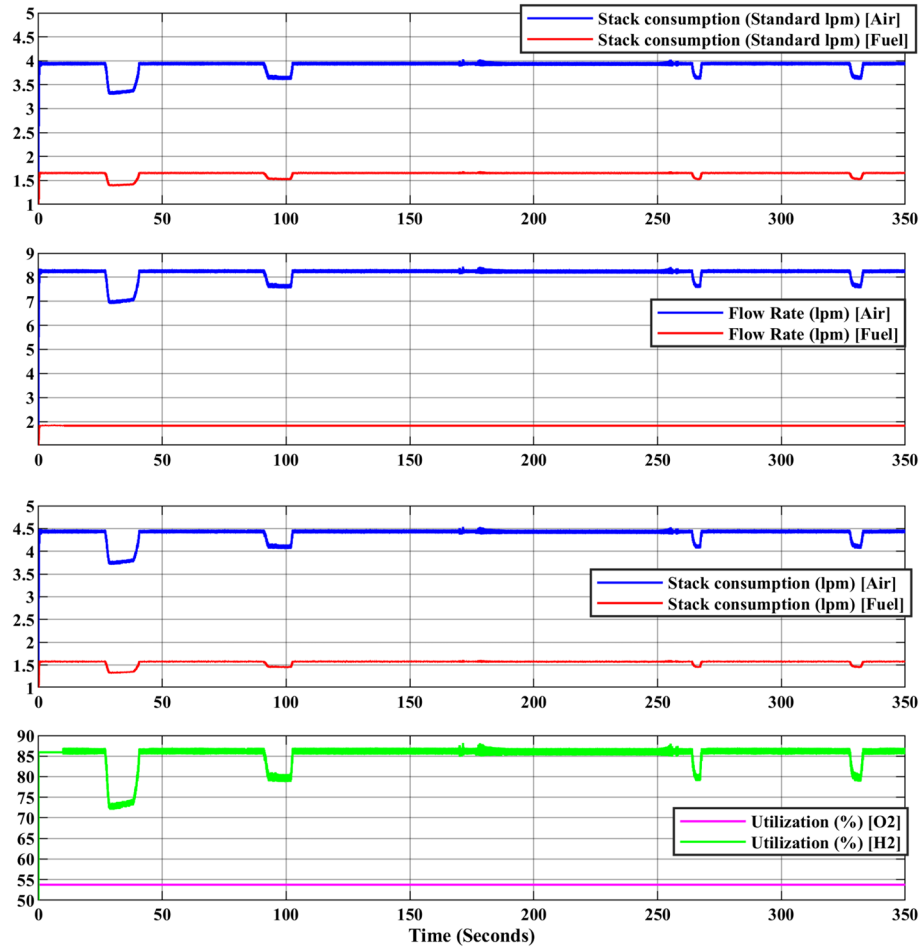

Fig. 15 Adaptive neuro-fuzzy results on hydrogen consumption

Table 11 Performance criteria of energy management strategies

Performance criteria	Energy management strategy	
	Fuzzy logic	ANFIS
Hydrogen utilization (%)	74.9	82.86
Hydrogen mass consumption (Kg)	0.0581	0.07263
Battery SOC scope (%)	75–69.88	75–70.21
Battery energy utilization (%)	6.82	6.39

- Minimize hydrogen and battery stress, thereby enhancing overall system endurance and reliability.
- Achieve superior performance under the ANFIS strategy compared to the fuzzy logic approach, particularly in stabilizing power flow during transitions between mission phases.

7 Conclusions

The paper is concerned with the electric UAV propulsion system, which consists of two main subsystems: the electric supply subsystem and the propulsion subsystem, interconnected via a monitoring and controlling subsystem. The electric supply subsystem combines the fuel cell stack as a primary source and a Li-Ion battery pack as a secondary source, allowing exploitation of both devices' advantages while mitigating their disadvantages. The UAV propulsion subsystem comprises a BLDC motor, its associated inverter, and control circuitry.

Two different energy management strategies (EMSs) were investigated and compared under various flight conditions, with each starting from the same initial conditions. The comparison showed that the fuzzy logic strategy offered the best hydrogen utilization and reduced fuel cell stress, while the adaptive neuro-fuzzy strategy minimized battery stress but resulted in higher hydrogen consumption.

Future research directions should focus on exploring the scalability of the proposed EMS framework for larger UAVs or different unmanned systems. This would involve adapting the control strategies to handle increased power demands and higher system complexity and incorporating additional renewable energy sources like solar panels. Moreover, extending the application of the EMS to other fields, such as ground robots or marine vehicles, could provide valuable insights into its adaptability and effectiveness in a wider range of autonomous systems. Investigating advanced optimization techniques for multi-objective EMS design would also contribute to further enhancing performance and efficiency in diverse operational contexts.

Funding This research did not receive any specific grant from funding agencies.

Data availability The data supporting this study are available from the corresponding author upon reasonable request.

Declarations

Conflict of interest The authors have not disclosed any Conflict of interest.

References

1. Cai G, Dias J, Seneviratne L (2014) A survey of small-scale unmanned aerial vehicles: Recent advances and future development trends. Unmanned Syst 02(02):175–199. https://doi.org/10.1142/S2301385014300017
2. Fei Y, Ding S, Li Y, Li X, Zhou Z, Zhang B, Li W (2021) A novel bidirectional dc solid state power controller for fuel-cell-powered uavs. In: IECON 2021–47th Annual Conference of the IEEE Industrial Electronics Society, pp 1–6 . https://doi.org/10.1109/IECON48115.2021.9589709
3. Bayram S, Boynuegri AR (2020) A comperative study on wiener filter and wavelet transform for energy management systems on hybrid unmanned aerial vehicles. In: 2020 6th International Conference on Electric Power and Energy Conversion Systems (EPECS), pp 112–117 . https://doi.org/10.1109/EPECS48981.2020.9304965
4. Wang W, Yu Y, Xu J, Zheng S, Deng Z (2021) The application of uav in intelligent distribution line acceptance system. In: 2021 4th International Conference on Advanced Electronic Materials, Computers and Software Engineering (AEMCSE), pp 289–293 . https://doi.org/10.1109/AEMCSE51986.2021.00068
5. Xu L, Hu Z, Xu L, Li J, Ouyang M (2021) Simulation analysis of fuel economy of a fuel cell/battery passive hybrid power system for commercial vehicles. In: 2021 IEEE 4th International Electrical and Energy Conference (CIEEC), pp 1–5 . https://doi.org/10.1109/CIEEC50170.2021.9510209
6. Sun Y, Xu Q, Yuan Y, Yang B (2020) Optimal energy management of fuel cell hybrid electric ships considering fuel cell aging cost. In: 2020 IEEE/IAS Industrial and Commercial Power System Asia (I CPS Asia), pp 240–245. https://doi.org/10.1109/ICPSAsia48933.2020.9208534
7. Wang H, Saha T, Riar B, Zane R (2019) Design considerations for current-regulated series-resonant converters with a constant input current. IEEE Trans Power Electron 34(1):141–150. https://doi.org/10.1109/TPEL.2018.2819887
8. Hazari MR, Jahan E, Siraj M, Khan M, Saleque A (2014) Design of a brushless dc (bldc) motor controller, pp 1–6 . https://doi.org/10.1109/ICEEICT.2014.6919048
9. Shamseldin M (2016) Speed control of high performance brushless dc motor. PhD thesis . https://doi.org/10.13140/RG.2.1.1472.9202
10. Karunarathne L (2012) An intelligent power management system for unmanned aerial vehicle propulsion applications
11. Aspalli MS, Munshi FM, Medegar SL (2015) Speed control of bldc motor with four switch three phase inverter using digital signal controller. In: 2015 International Conference on Power and Advanced Control Engineering (ICPACE), pp 371–376 . https://doi.org/10.1109/ICPACE.2015.7274975
12. Saied M, Mostafa MZ, Abdel-Moneim TM, Yousef H (2006) On three-phase six-switches voltage source inverter: a 150° conduction mode, vol 2, pp 1504–1509 . https://doi.org/10.1109/ISIE.2006.295694
13. Elkerdany MS, Safwat IM, Yossef AMM, Elkhatib MM (2020) A comparative study on using brushless dc motor six-switch and four-switch inverter for uav propulsion system. In: 2020 12th International Conference on Electrical Engineering (ICEENG), pp 58–61 . https://doi.org/10.1109/ICEENG45378.2020.9171757
14. Smith R (2010) Design of a control strategy for a fuel cell/battery hybrid power supply
15. Garcia P, Fernandez LM, Garcia CA, Jurado F (2010) Energy management system of fuel-cell-battery hybrid tramway. IEEE Trans Industr Electron 57(12):4013–4023. https://doi.org/10.1109/TIE.2009.2034173
16. Elkerdany MS, Safwat IM, Mohamed Yossef AM, Elkhatib MM (2020) Hybrid fuel cell/battery intelligent energy management system for uav. In: 2020 16th International Computer Engineering Conference (ICENCO), pp 88–91 . https://doi.org/10.1109/ICENCO49778.2020.9357393
17. Thounthong P, Rael S (2009) The benefits of hybridization. Ind Electron Mag IEEE 3:25–37. https://doi.org/10.1109/MIE.2009.933885
18. Caux S, Hankache W, Fadel M, Hissel D (2010) On-line fuzzy energy management for hybrid fuel cell systems. Int J Hydrogen Energy 35:2134–2143. https://doi.org/10.1016/j.ijhydene.2009.11.108
19. Elkerdany MS, Safwat IM, Youssef AMM, Elkhatib MM (2022) A comparative analysis of energy management strategies for a fuel-cell hybrid electric system uav. In: 2022 IEEE Aerospace Conference (AERO), pp 1–10 . https://doi.org/10.1109/AERO53065.2022.9843240

Springer Nature or its licensor (e.g. a society or other partner) holds exclusive rights to this article under a publishing agreement with the author(s) or other rightsholder(s); author self-archiving of the accepted manuscript version of this article is solely governed by the terms of such publishing agreement and applicable law.